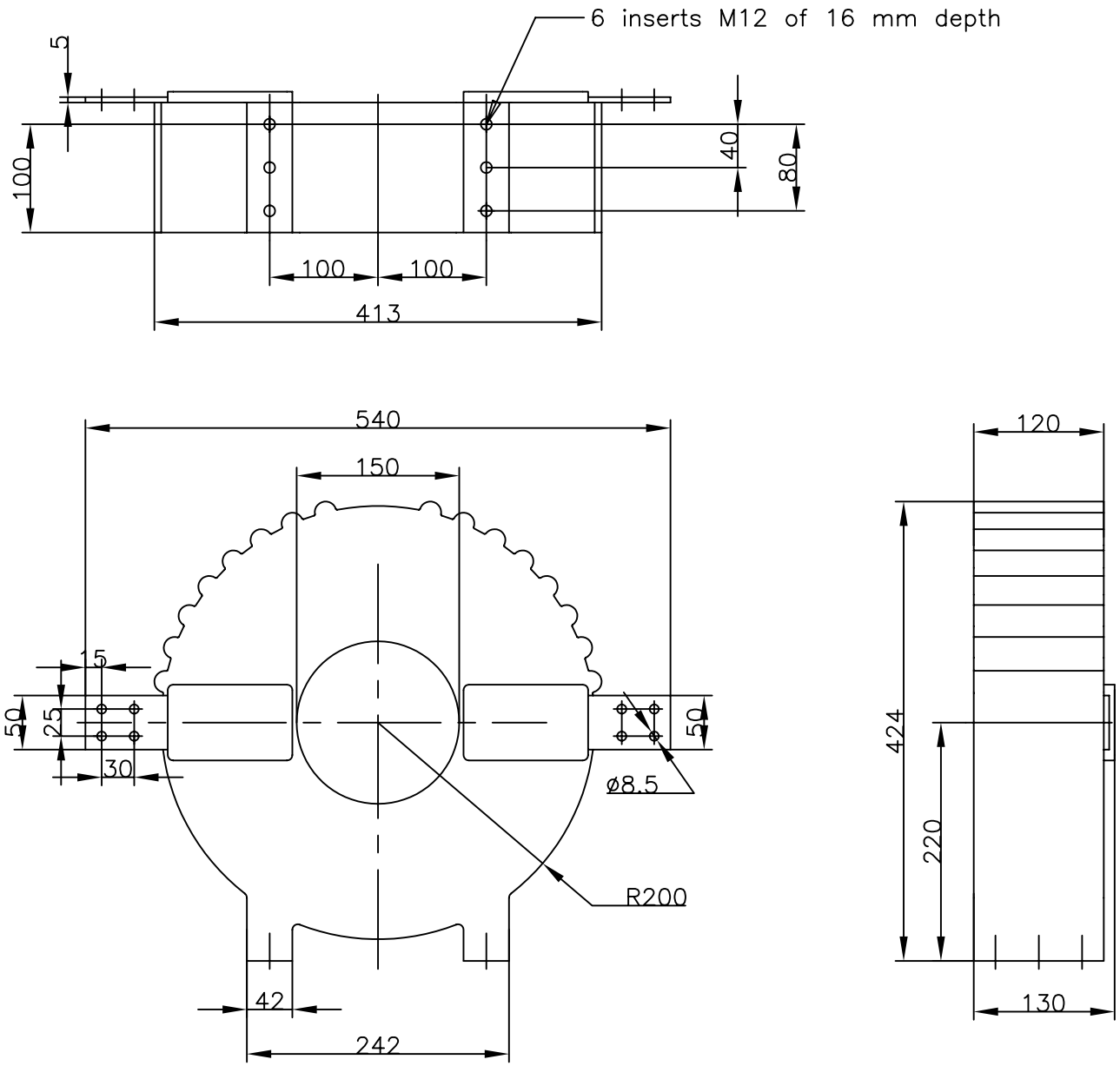

Maximum torque M12–16: 25 Nm

Weight: 47kg

REVISIO	MODIFICATION	DATE	DRAWN	APPR.

SURFACES Ra ∀ (µm)	DRAWN	PEsteban	2007
	APPR.	IHiltune	2006
DIMENSIONS mm	2006	NAME	DATE
REF.			1:20

ITEM	DESCRIPTION	REQD	MATERIAL	NOTES

TITLE
MEDIUM VOLTAGE DAMPING REACTOR
TYPE SC LAYOUT
3.6kV – 36kV / 50Hz – 60Hz
INDOOR/OUTDOOR CONSTRUCTION

NOKIAN CAPACITORS

DRG ACADR15